Repeater-module CM11-RS422

Connections :
COM-A to terminals A1-A4 (new network section)
COM-B to terminals B1-B4 (direction PC)
COM-C to terminals C1-C4 *not used
Provide a data socket with overvoltage protection on both sides (COM-A and COM-B)!

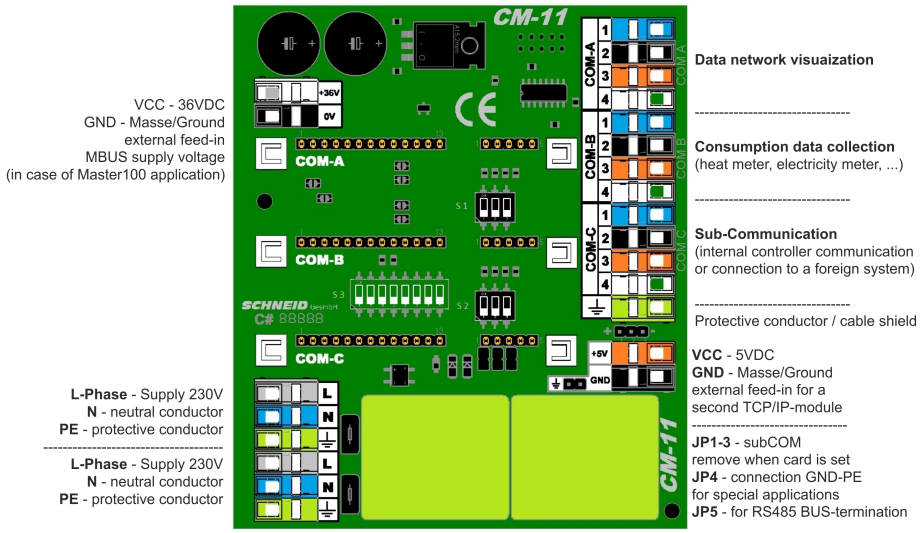

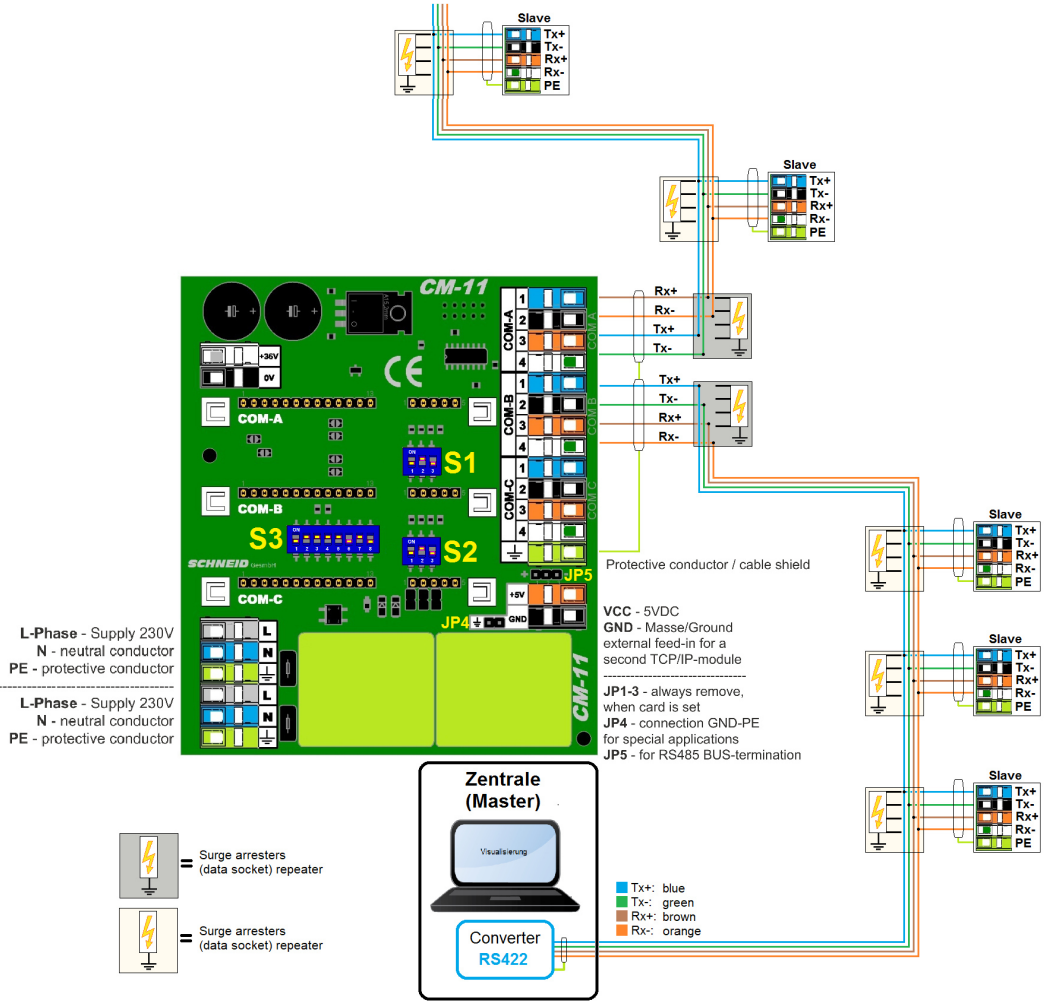

© Schneid GesmbH